iwata

和文取説は、裏面にあります

This manual contains IMPORTANT WARNINGS and INSTRUCTIONS.
Read and understand the instruction manual, before use and retain for reference.

ISO 9001
JISQ 9001
Our products are produced as per international standards ISO9001

INSTRUCTION MANUAL (For Oversea's Sales)

PROFESSONAL AIRBRUSH

iwata Eclipse

HP-BS・CS・SBS・BCS

Be sure to observe warnings, cautions and instructions in this instruction manual. Inadvertent jetting of paint or inhalation of organic solvents can cause serious bodily injury. Be sure to observe important items especially those shown by the marks below.	
あ WARNING	Indicates a potentially hazardous situation which, if not avoided, may result in serious injury or loss of life.
あ CAUTION	Indicates a potentially hazardous situation which, if not avoided, may result in minor or moderate injury or property damage.
Important	Indicates notes which we ask you to observe. They are helpful to achieve full performance and functions of the equipment.

Specifications

MODEL	TYPE OF FEED	PATTERN	FLUID NOZZLE φ【mm】	CUP【ml】	MAX AIR PRESSURE【MPa】	NOTE
HP-BS	GRAVITY	ROUND	0.3	1.5	0.29	
HP-CS				7.0		
HP-SBS				1.5		SIDE BOTTLE
HP-BCS	SUCTION		0.5	28		PLASTIC BOTTLE

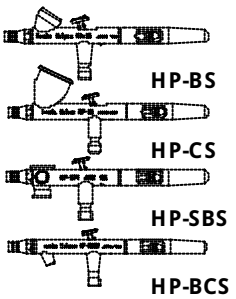

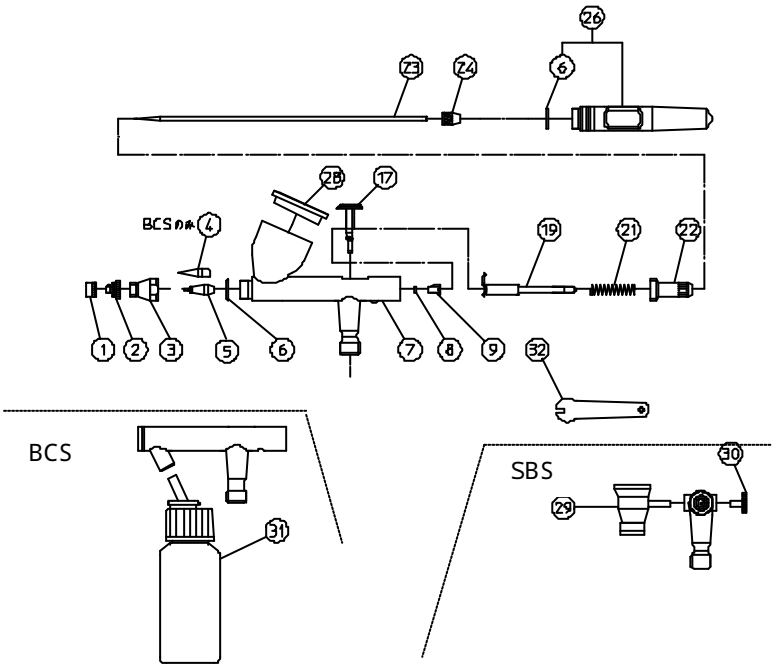

■ PARTS LIST

	№	Description	Q'ty
	1	Needle Cap	●
	2	Nozzle Cap	□
	3	Head Cap	●
◆	4	Nozzle	BCS
◆	5	Nozzle Gland Set	○
◆	6	Head O Ring	●
	7	Body	
◆	8	Oring	●
	9	Needle packing Screw	●
	17	Main Lever	●
	19	Needle Chucking Guide with Auxiliary Lever	●
	21	Needle Spring	□
	22	Spring Guide	●
◆	23	Needle	□
	24	Needle Chucking Nut	●
	26	Cap	□
	28	Lid for cup	CS
	29	Cup Set (1/8oz)	SBS
	30	Blankig Cover	SBS
	31	Plastic Bottle	BCS
	32	Spanner	○

1) ◆ Marked parts are wearable parts.

2) ● Indicate Common Parts For Four Models

3) ○ Indicate Common Parts for HP-BS・HP-CS・HP-SBS.

4) □ Indicate Common Parts For HP-BS・HP-CS・HP-SBS,BCS Specific Parts.

5) CS・SBS・BCS Indicate CS,SBS,BCS Specific Parts.

6) Body differs according to model.

When ordering parts, specify gun's model, part name with ref. No. and marked No. of air cap set, fluid nozzle and fluid needle.

Warnings for safe operation

あ WARNING

Fire or explosion hazard

1. Painting job site must be free of open flames.
   *Paint is flammable and combustible (organic solvent base paints such as lacquer or ceramic varnish).
   *Never expose to flammable materials such as cigarettes or electrical equipment .
2. Never use the following halogenated hydrocarbon solvents which can cause cracks or dissolution on airbrush body.
   *Improper solvents: methyl chloride, ethyl chloride, ethylene dichloride, methyl dichloride, carbon tetrachloride, trichloroethylene, 1.1.1 trichloroethylene, etc .(Be sure that all fluids and solvents are compatible with airbrush parts. We are ready to supply details of materials used in the airbrush on request.).

Misuse hazard

1. Never point airbrush in the direction of people body or animals except when using exclusive fluids such as body painting or nail art. If done, it can cause inflammation of the eyes or skin, or cause other physical injury.
2. Never exceed max. operating pressure of airbrush. If done, airbrush can explode and cause injury or physical injury or death.
3. Always release air pressure before cleaning, disassembling or servicing. If not, remaining pressure can cause injury by the splashing of cleaning liquid or other misuse. In order to release pressure, stop supply of compressed air to airbrush and slightly push main lever.

Hazard to human body

1. Use airbrush in areas which are well-ventilated by an exhaust fan. If not, injury will occur through the inhalation of fluid, and danger of ignition will increase.
2. Always wear protective clothing or gear (eyewear, gloves, respirator, etc.). If not, cleaning liquid, etc., will come into contact with your eyes or skin and cause inflammation. If you feel something is wrong with your eyes or skin, see a doctor immediately.

き

Other hazards

1. Never alter airbrush. If done, it can cause failure and poor performance.
2. Never use for food industry or chemicals. If done, it can cause an accident due to corrosion of paint passage or health problem due to inclusion of foreign matter.

■ How to operate

● Connection

あ CAUTION

* Use clean compressed air which is filtered through an air filter. Dirty air can cause painting failure.
* When you use for the first time after unpacking, clean inside with cleaning liquid in order to remove remaining anti-corrosive oil inside fluid passage. Remaining oil can cause painting failure such as fish eye (dented finishing).
* Firmly fasten air hose and fluid cup to airbrush. If not done, disconnected hose or falling cup can cause physical injury.

(1) Use slender and exclusive air hose for airbrush such as Ø 2 x 4mm tube, etc.
(2) Use air pressure at around 0.10~0.20 MPa . Use air regulator to get stable air pressure. Use air filter to remove moisture, oil and dust in air.

● Spraying

* Filter color material with fine filter paper (cloth), or pigments may clog nozzle.
* When spraying lacquer or varnish, add retarder to prevent whitening.
* Never damage nozzle cap or nozzle. If done, it will adversely affect atomization.
* Do not mix different color material (example: paint and dyestuff).
  If done, the viscosity will increase and cause malfunction.

(1) Before spraying, loosen needle chucking nut and gradually push needle inwards till needle touches nozzle, and then retighten needle chucking nut. Pour cleaning liquid into cup and clean fluid passage.

(2) First push main lever with forefinger or thumb downwards in order to release air, and pull it toward you. Then, color material will come out. Be sure to push main lever forward (original position) and detach finger to stop spraying. If you do not push main lever (without air release), and just pull it forward, a large amount of color material may jet out.

■ Maintenance after Painting

● Maintenance

あ WARNING
* Always completely release pressure before maintenance in accordance with warning of safe operation on page 2. If not done, remaining pressure can cause injury by the splashing of cleaning liquid or other misuse. * The operator must be fully conversant with the requirements in this manual and have sufficient knowledge and experience. * Pay full attention to the sharp tip of needle in order to avoid injury.

Maintenance procedure	Important
1. After operation, be sure to empty fluid cup and spray water or cleaning liquid for cleaning. *Then close tip of nozzle cap with finger and pour water or solvent into cup. Then if you push main lever, air flows backward into nozzle which works like gargling.	1. Incomplete cleaning can cause adverse pattern shape and particles. *Be careful with handling of the tip of needle and nozzle since they are very weak.
2. Pull out needle and remove foreign matter. Clean needle and insert it till it touches nozzle. Clean other parts with attached brush soaked with cleaning liquid and waste cloth.	2. Never immerse the whole airbrush into liquid such as thinner. *Immersion for a long time can damage O ring or packing. *Never damage holes of nozzle cap, nozzle, or needle. If done, it can influence atomization adversely.
3. Fully clean fluid passage before disassembly.	3. Remove fluid nozzle while pulling needle with main lever pulled (toward you), in order to protect seat section.

● Inspection

Where to inspect	When to replace parts
1. Each hole passage of cap and nozzle	*Replace if damaged or deformed.
2. Packing or o rings	*Replace if damaged or worn out.
3. Seat section between nozzle and needle for leakage	*Replace if there is still leakage even after you clean nozzle and needle. If you replace nozzle or needle only, first match up nozzle and needle to see if there is any leakage. *When replacing nozzle, use exclusive tool and gradually tighten. Use of other tools can cause breakage of thread or incomplete centering.
4. Tip of needle	*Replace if bent or broken. You cannot repair a bent needle. Replace it with a new one immediately. Damaged needle can cause adverse atomization and damage to tip of nozzle or inner diameter.

R1: retighten R2: adjust R3: clean R4: replace parts

Problems	Place of Problem	Where to check	Causes	Remedies			
				R1	R2	R3	R4
Paint leaks	tip of brush	fluid nozzle ~ fluid needle	dirt, damage, wear on seat			○	○
			insufficient nozzle tightening	○			
		needle spring ~ needle spring case	wear on needle spring				○
			loose needle packing screw	○			
		needle ~ fluid needle packing screw	needle does not return due to paint buildup on fluid needle.		○	○	
		need ~ needle chucking nut	loose needle chucking nut	○			
	main lever	needle packing	damage to or wear on fluid needle packing				○
		needle packing screw	loose needle packing screw	○			
Paint does not come out.	tip of airbrush	fluid nozzle	clogged			○	
		needle chucking nut	insufficient tightening	○			
		needle cap~nozzle cap	dirty needle and nozzle cap			○	
		Needle	Clogged			○	

■ Causes and remedies of incomplete spray patterns

Pattern	Causes	Remedies
Skipping 	Paint sticks to tip of needle	Clean tip of needle.
	Air enters screw section between nozzle and body.	Remove nozzle, clean screw Section and retighten
	Tip of nozzle is set back from tip of nozzle cap.	Tighten nozzle and cap.
Spattering 	Paint sticks to tip of nozzle, needle or needle cap.	Clean nozzle, needle or needle cap.
	Bent tip of needle, break or damage to tip of nozzle	Replace parts.
	Nozzle is clogged.	Clean nozzle.
	Atomizing air pressure is too low.	Increase air pressure.
	Paint viscosity is too high.	Reduce its viscosity.

Please contact your local anest iwata agent for inquiries.

7 8

№ 1637-00
Code № 08535580

3176, Shinyoshida-cho, Kouhoku-ku, Yokohama 223-8501 Japan